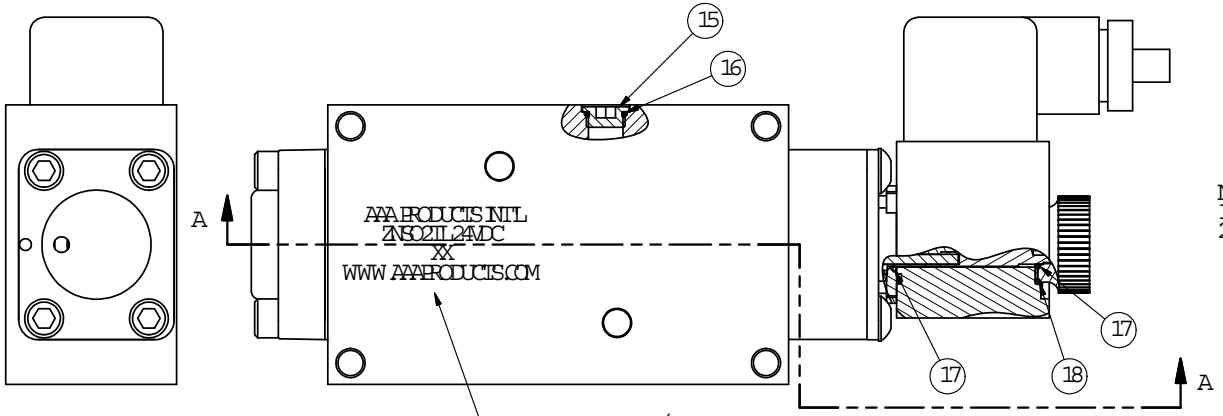

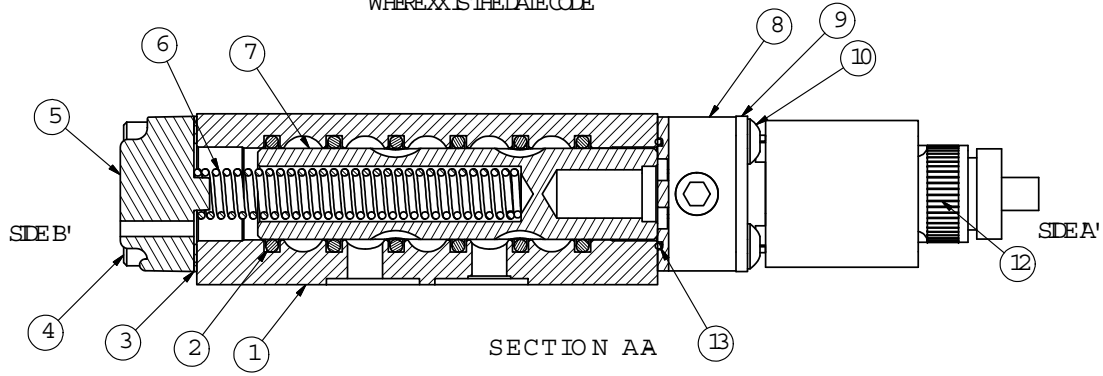

SECTION AA

SCALE 1 : 1
VIEW FROM 3 PORT SIDE

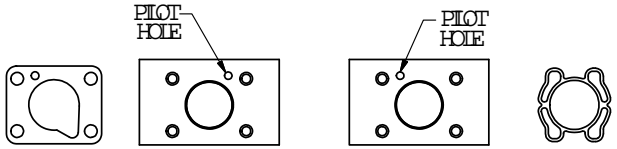

POSITION GASKET TO SEAL PILOT HOLE ON SIDE B' ONLY.

ALIGN PILOT AND SLOT IN ADAPTOR WITH GASKET IN BETWEEN SIDE A' ONLY. FOR EXTERNAL PILOT OPERATION ROTATE ADAPTOR 180 DEGREES. REMOVE 1/8" NPTF PLUG AND SUPPLY 50-150 PSI TO 1/8" NPTF PILOT PORT IN ADAPTOR.

NOTES:
1) ALWAYS GIVE VALVE MODEL AND PART NUMBER WHEN ORDERING PARTS.
2) FOR DIFFERENT VOLTAGES OTHER THAN 24VDC, CONSULT FACTORY.

ITEM	QTY	PART NO	DESCRIPTION
19	1	2NSK2	KIT-SHAFT MOUNTING, BASS NAMUR, 2EA V68 SS SCREW, 2EA V65 ORING
18	1	V67	ORING, VITON, 7.0 ID, 1.4 MX 1 MM, 1.67 NUT SEAL
17	2	V66	ORING, VITON, 7.0 ID, 3 MX 1 MM, 1.67 STEM SEAL
16	1	V58	ORING, BUNA N, 7.0 ID, 6 MX 1 MM, NAMUR PLUG
15	1	V57	PLUG, 3/8 HEX HEAD, BRASS, NAMUR VALVE
14	1	V99SS	PLUG, SOCKET HEAD 1/8-27 NPT, 7/8 TAPER, PAN HEAD, SEAL, STAINLESS STEEL
13	1	EC3	GASKET-END MOUNTS DIRECT, BUNA N, 1/4" & 3/8" VALVES
12	1	V56W	STRESS NUTS, PRESSURE MUFFLER, DUST EXCLUDER, V63 LOCKWASHER
11	1	V623	ABC COIL 24VDC WITH 3 METER CORD NASS# 12530-01/886.
10	4	V38SS	SCREW, 1/4-20X1, BUTTON HEAD SOCKET CAP, 18-8 OR 303 SS
9	1	SC37	PLATE, REINFORCEMENT, STEEL DIRECT, STAMPED, 304 STAINLESS
8	1	V501	SPACER, END MOUNT, NO LOCKING RIDGE
7	1	S3	SPOOL-STANDARD, 2 POSITION DETENT, 1/4" & 3/8" VALVE
6	1	CS3	SPRING RETURN, EXCEPTIONAL (O&P) 1/4" & 3/8" VALVES
5	1	SC3A	END CAP, VENTED, SPRING RETURN, 3/8" A, 1/4" & 3/8" VALVE
4	4	V38SS	SCREW, 1/4-20X3/4, SOCKET HEAD CAP, 18-8 SS
3	1	EC3	GASKET-END CAP, 1/4" & 3/8" VALVE
2	6	V59	ORING, VITON, STEEL, 1/4" & 3/8" VALVES
1	1	Z41	BODY-BASE, UPPER PORTS (BOTTOM FEEDER), 1/4" NAMUR

LIMITS ON DIMENSIONS ± 1/16 DECIMAL ± .01 FRACTIONAL ± 1/64 ANGULAR ± 1/2°
UNLESS OTHERWISE SPECIFIED

AAA PRODUCTS INTERNATIONAL

1/4" NAMUR, SINGLE SOL 2 POS, SPRING RTRN, BRASS & STAINLESS, ATEX, 24VDC, DUST EXCLDR
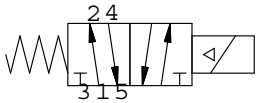
2NSO2IL 24VDC